ResearchGate

See discussions, stats, and author profiles for this publication at: https://www.researchgate.net/publication/326050657

Floating photovoltaic plants on artificial accumulations — Example of Jablanica Lake

Conference Paper · June 2018

DOI: 10.1109/ENERGYCON.2018.8398765

CITATIONS
7

READS
675

3 authors, including:

Sedin Pašalić
University of Sarajevo
1 PUBLICATION **7** CITATIONS

SEE PROFILE

Abdulah Aksamovic
University of Sarajevo
29 PUBLICATIONS **60** CITATIONS

SEE PROFILE

Some of the authors of this publication are also working on these related projects:

Project Elektronika; tehnologija, komponente, sistemi View project

All content following this page was uploaded by Abdulah Aksamovic on 08 June 2019.

The user has requested enhancement of the downloaded file.

Floating Solar Plants on Artificial Accumulations - Example of Jablanica Lake

Sedin Pašalić*, Abdulah Akšamović* and Samir Avdaković*
* University of Sarajevo, Faculty of Electrical Engineering, Sarajevo, Bosnia & Herzegovina
aaksamovic@etf.unsa.ba

***Abstract*— The paper presents an analysis of the possible installation of floating solar plants on artificial accumulations on the example of Jablanica Lake. It was shown that on a surface of less than 3% of the total area of the accumulation of HPP Jablanica, there could be built a floating solar power plant with a power of 30MW. This power would add another generator of 30MW to HPP Jablanica, which would increase the current number of the 6 generators to 7 with a total installed power of 210MW. This would enable significantly better exploitation of the Neretva and Rama basins, and increase production in the summer period with a decrease in lake level oscillations. This would solve two very important problems with the construction of solar plants: occupying usable areas, and taking energy from local consumption.**

Keywords*— *floating solar plants; concentrated power plant; floating technology; hydro accumulations; Photovoltaic system;

I. Introduction

One of the solutions to the need for extra energy is the construction of solar plants. There are three key issues that this type of electricity generation currently has: expensive technology in relation to other forms of electricity generation, the need for large areas for plant installation, production concentration in the periods of sunshine. Despite the above mentioned problems since it is an ecologically pure source, with an unlimited and free source, this technology becomes increasingly more present every day [1].

The increasing production of solar systems, and the development and increase of solar module efficiency with the increase of the price of other forms of energy will make solar technology competitive with existing sources. At the present, the production price of solar power sources is 2 to 6 times more expensive than the average of other sources for plants up to 1MW [2], while the price of large plants has already reached production costs of thermal power plants and gas power plants [1].

Efficiency of solar panels used today is 14% to 18%, which for installation of 1MW plant requires an area of 7500 to 15000 m^2. Such large areas are currently being secured by land acquisition which is very often cultivable land [3]. This significantly increases investment and endangers the natural environment [4]. Unfortunately, there are cases where the forests were cut down in order to provide the required surface for the construction of solar plants. Although the areas of residential and business facilities are significant and suitable for such installations, the need for large-scale construction, the lack of quality legislation, and the hunger for the investor's profitability, endanger the already deficient arable land. Therefore, the use of already occupied areas such as water surfaces of natural or artificial accumulation for the construction of solar plants is getting more interesting.

PV plants are normally connected to the distribution network [5]. This concept offers certain benefits such as consumption at the site of production, a simpler and cheaper facility. Problems occur when installed PV power exceeds the local consumption needs, especially if it happens several times. Taking that energy and its accumulation for a period without sunshine is one of the key problems of this technology [6]. This problem limits the further development of solar plants and solving it is essential for the further development of this technology. The accumulation of solar energy in other forms such as hydrogen, hydro accumulations, chemical energy in batteries, etc., adds additional costs to the already costly solar energy production. The installation of solar plants on artificial reservoirs of hydro power plants offers a more simple and a free system of accumulation of this energy.

The first floating solar plant was built in 2007 in Japan. Panels were placed on the reservoirs of water in the vineyard. The motive was to use as much surface as possible for vineyards and crops [7]. In the next decade, many such plants have been built. Only the firm Ciel&Terre in its reference list at the end of 2015 had 43 plants with a total installed power of 50,073MW [8]. Currently the largest installed plant connected to the PES of this type is installed in China [9]. The installed power of this plant is 40MW. In China, in 2017, the construction of a 70MW floating solar plant was started, currently with the largest installed power in the world. The plant is built on the water reservoirs used for irrigation and will be located on 13 separate cells, and it will use 194 000 solar panels [10].

This paper analyzes the possibility of building a floating solar plant on the artificial accumulation of the Jablanica Lake. The construction of a 30MW concentrated power plant with direct connection to the transmission network is analyzed.

II. Floating Solar Power Plants

A floating solar plant can be set up on various water surfaces such as water tanks, artificial and natural lakes, water canals, hydro accumulation, sea surfaces, etc. To get a floating solar system, it is necessary to combine solar cell technology and floating technology. Linking these two technologies creates a new technological concept.

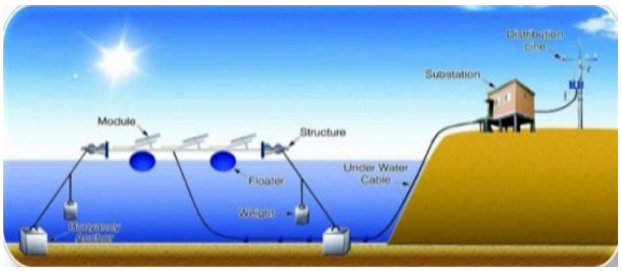

Fig. 1: Floating solar plant [11]

The floating solar plant consists of the following units:

- Floating substrate - Allows the installation of solar cells on the water surface.
- Anchoring - The system can be adjusted to water oscillations while retaining its position.
- Photovoltaic system - It consists of solar panels, inverters, cables as well as other equipment that allows the system to function. It is laid on the surface of the floating surface.
- Underwater cable – „transmits“ generated electricity .

The material used for the floating surface should meet the following characteristics: easy adaptation to changes in water level; possibility of recycling; non-toxicity, resistant to salt water, various acids and UV rays; temperature resistance ranging from -60 ° C to 80 ° C; lifetime minimum 30 years [11].

The material currently in use and which represents the second generation of this technology is HDPE (High Density Poly Ethylene). It has the advantage of low cost and high reliability. The structure is shown in Fig. 2. The HDPE material has the following properties: resistant to UV radiation and rust; resistant to extreme winds and weathering, it can withstand winds up to 180 km/h; safe assembly and maintenance; safe for laying on clean water surfaces intended for drinking; adaptive to any electrical configuration and recycling capabilities [11].

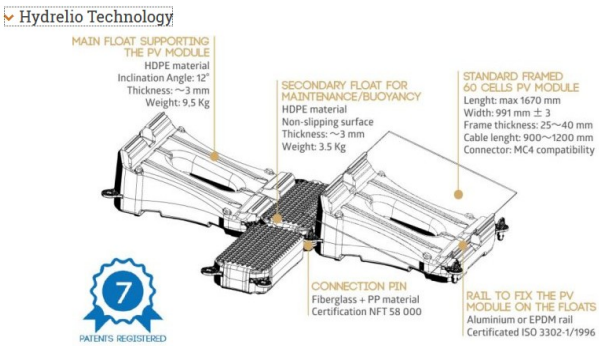

Fig. 2: HDPE structure of floating plants [12]

The latest, third generation of floating solar panels are flexible panels. The nature of the flexible panel structure differs from the structure of the first and second generations. Solar cells are not mounted on the float but are in direct contact with the surface of the water. Such structures are exposed to less stresses caused by waves, tides and winds [7]. The advantages of such constructions are: the cells are in direct contact with water and cooling is more efficient, direct contact with water gives the effect of self-cleaning and maintenance is cheaper. There is a smaller number of components that make up the system design thus consequently lowering the production costs. This concept of building floating solar plants is also suitable for installation on sea surfaces. The cells are more resistant to strain and can withstand high tide, low tide and strong waves as they are made of flexible parts [7].

The particular problem of PV panels is excessive heating. The panel operating temperature reaches more than 60°C when efficiency decreases up to 10% [13]. Floating solar panels placed on the water surface naturally cool down. As a result, the panel temperature increase is smaller than that of panels mounted on roofs. The lifespan of floating solar panels is therefore longer because they are exposed to less stress.

III. HPP JABLANICA

The hydroelectric power plant Jablanica is located on the banks of the Neretva River, along the main road Sarajevo - Mostar. Electricity production in HPP Jablanica began in February 1955. It is a derivation power plant with an accumulation pool for seasonal balancing, and installed power - 180MW (six generators with Francis turbines). The average annual production is 770 GWh. With the shortest route between the lake and the place where the machine room is located in Jablanica, the water flows through the two tunnels about two kilometers long while using a maximum fall of 111 meters. The comprehensive revitalization of the HPP (six generators and part of the accompanying equipment) was completed in 2008. The revitalization capacity was increased from 150MW to 180MW and the HPP lifetime was extended for the next 30 to 40 years [14].

Jablanica Lake is an artificial accumulation lake on the Neretva within the hydroelectric power plant Jablanica. It stretches from Konjic to Prozor, along the M-17 highway. The lake surface is 13 km^2. The height of the dam is 80 meters and the lake extends upstream to Konjic to one side and to Prozor to the other side. Its maximum length is about 30 km. The maximum depth is between 70 and 80 meters, and the oscillations of water level are up to 25 meters. For the production of 1 kWh of electricity the HPP uses an average of 4.04 m^3 of water. The minimum daily mean flow rate at the „Jablanica“ water station (summer period) is 40 m^3/s.

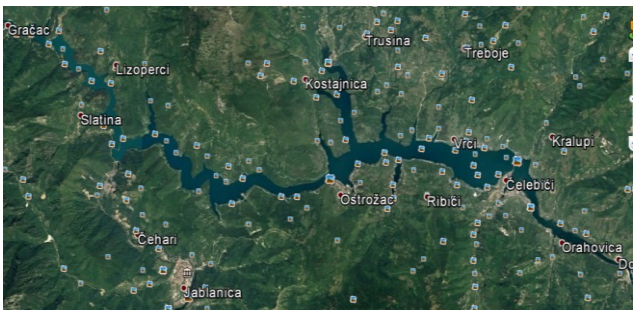

Fig. 3. Google Earth view of Jablanica Lake

According to the available solar radiation data, Bosnia and Herzegovina (B&H) has significant solar energy resources above the European average with extremely favorable seasonal schedules, giving it the opportunity for its efficient and long-term use. Data on average wind, temperature, and irradiance data for the Jablanica Lake site are taken from the „NASA Surface meteorology and Solar Energy database“ [15] which are: the average annual radiation value per day of 3.92 kWh/m^2, the annual mean value of the temperature 10.94 °C and the annual average wind speed of 4.16 m/s.

IV. Solar Plant On Jablanica Lake

In this section, a preliminary analysis of the construction of a floating solar power plant of 30MW was made. Certain limitations have been set in the analysis, which have been respected. These limitations are: the existing function of the Jablanica Lake accumulation as part of the PES of B&H must not be disturbed, the ecological, tourist, sporting, economic functions of the lake must not be disturbed, the connection to the PES system should be feasible. Based on these limitations, the concept of a modular plant was made. The basic module is a 3 MW plant. All modules are connected to a 20kV connection which is further connected to the 220kV transmission network.

A. 3MW module

For the analysis, solar panels BLK-210 and SB5000TL inverters were selected. Table 1 lists their parameters [16].

Number of panels in a row is calculated according to the following formula:

$$BM = \frac{V_{\max,MPPT} + V_{\min,MPPT}}{2} / V_{panel}, \quad (1)$$

what for the solar panel and inverter parameters gives a number of 8 panels in one row.

TABLE 1. Parameters Of BLK-210 And SB4000

BLK-210		SB5000 TL	
Parameter	Value	Parameter	Value
Maximum power of the panel	210W	Maximum AC power	5000W
Panel Width	798mm	Maximum DC power	5300W
Panel length	1559mm	Maximum DC current	2x15A
Maximum working voltage	40V	Maximum DC voltage	550V
Maximum working current	5,25A	Minimum MPPT voltage	175V
Open circuit voltage	47,7V	Maximum MPPT voltage	440V
Short circuit current	5,75A	Efficiency	97%
Temperature coefficient	-0,38%/°C	Maximum output current	22A
Efficiency	16,9%		

For the given power according to the number of panels in a row, the number of rows is calculated according to the formula:

$$BN = \frac{P}{BM \cdot P_{\mathrm{mod}ula}}, \quad (2)$$

where P is the required power of the plant.

This gives 1786 rows, or 14288 solar panels.

Required number of inverters is given with:

$$B_I = \frac{BM \cdot BN \cdot P_{\mathrm{mod}ula}}{R_{DC-AC} \cdot P_{inv}}, \quad (3)$$

and amounts to 600.

The required surface depends on the slope under which panels are placed. The spacing between the rows where the panels are placed under the angle α for avoiding the shadow is calculated according to [17]:

$$D = L \cdot [\cos\alpha + \sin\alpha \cdot \tan(L_{at} + 23.5°)] = 1.746m \quad (4)$$

where L is the width of the panel (0.8m) and L_{at} the latitude of the location (43.69 °).

Now the area is calculated as:

$$A = BM \cdot BN \cdot D \cdot H, \quad (5)$$

where H is the length of the panel (1.55m).

For the latitude of Jablanica Lake, the recommended slope of fixed solar panels is 35° giving the required surface area of 38686.7 m^2. If we look at this surface in the form of rectangles so that sides *a* and *b* are approximately equal, and that page *a* can be divisible by 8 for the simplest connection of 8 panels in the series, than *a* = 194.4m and *b* = 195.5m. Rounding to a number of arrays and rows gives 112 arrays of 16 strings each with 8 panels. Further consideration is made with an approximate surface of (195x195) m^2 = 38025m^2 where it is possible to set 112x16x8 = 14336 panels with a maximum power of 3010.56kW which is approximated with the required 3MW. One inverter connects to a parallel connection of three-string of 8 panels. The maximum operating voltage at the input of the inverter is 320V, the maximum working current is 15.75A and the maximum input power is 5040W which for the selected 5kW inverter means 100.08% of the capacity utilization. Three rows of 8 panels were omitted for the need of transformer installation with the corresponding equipment. The platform foreseen for this purpose has a surface area of 64.95m^2. According to this information, the total number of inverters required is 599. The number of panels needed is 14312. The required surface is 38025m^2. Spatial arrangement of panels and inverters is given in Fig. 4.

To reduce the losses on connecting cables, a complete installation including a 380V / 20kV transformer, 3MW is placed on a 195x195m^2 platforms. The DC/AC converters are located along every three strings of 8 panels. The cable length from the string to the DC converter is minimal and is 15m. A cable with 4mm^2 cross-section with 7mΩ/m resistance is used. This cable can take a maximum current of 5.25A. The total length of all DC cables is 15x599x3 =

8985m. Total cable losses are: 1733.5W or 0.057%. At the output from the inverter a three-wire AC cable (3x4mm^2) is used. The maximum AC voltage at the output from the inverter is 230V and the maximum current is 21.5A. The resistance of the cable used is 0.6mΩ/m. The total length of all AC cables is: (14x38x195)/2+195x599/2=110272m, which gives the amount of losses on AC inverters of 30584W or 1.01%. The losses on the inverters are 3%, on the transformer 5% so that the total losses on the plant are 9,067%.

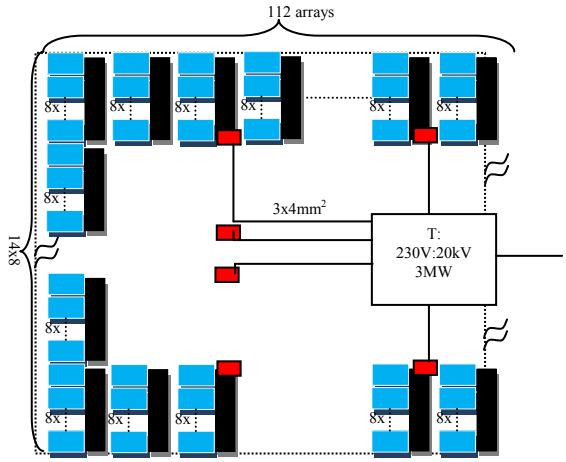

Fig. 4. Spatial arrangement of panels and inverters

B. *Choice of plant position*

Three locations with 5, 3 and 2 basic modules of 3MW are considered. The selected locations allow the installation of these modules in such a way that they are positioned so that the lake remains buoyant, that it does not occupy the coastal belt, and to allow the lake level to vary.

The first location is located west of Čelebići. The width of the lake in this part is greater than 800m. Five installations were considered here. The distance of any of the plants from the coast is greater than 110m. The distance between the plants is greater than 150 m. At these locations, the lake level may vary up to 25 m while all plants remaining on the water.

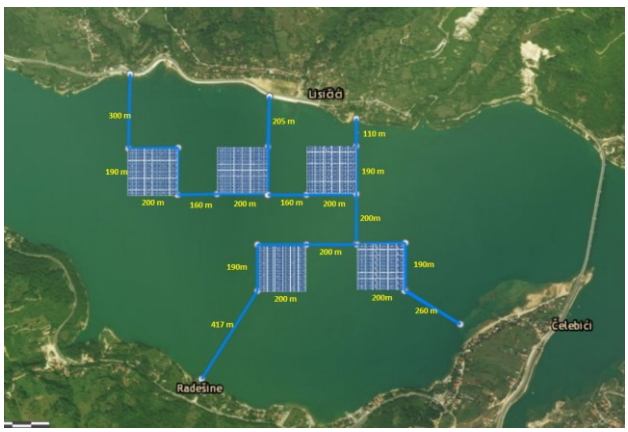

Fig. 5. Location west of Čelebići, 15MW

The second location is located east of Ostrožac. The width of the lake in this part is 470m. Three plants were considered here. The distance of any plant from the coast is greater than 95m. The distance between the plants is greater than 100 m. At these locations the lake level may vary up to 25 m while all the plants remaining on the water.

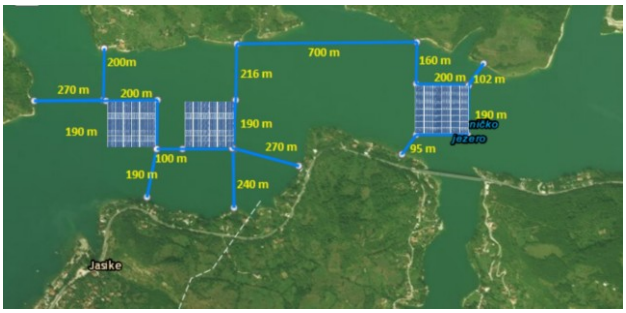

Fig. 6. Location East of Ostrožac, 9MW

The third location is located east of the dam. The width of the lake in this part is 550m. Two plants were considered here. The distance of any plant from the coast is greater than 130m. The distance between the plants is greater than 160 m. At these locations, the lake level may vary up to 25 m while all the plants remaining on the water.

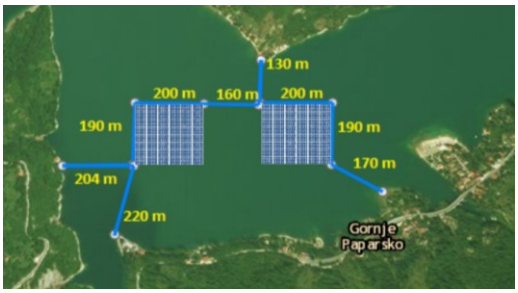

Fig. 7. East of the dam, 6MW

C. *Taking production of PV plants*

Considering the projected power of the plant, a connection to the transmission network was considered. All 10 3MV nominal power units are connected to a 20 kV distribution line. The length of this transmission line is 10.9km, and the nominal power is 50MW. The cable is an underwater cable. At the center of this transmission line is a 20kV/220kV transformer on the shore of the lake, with a power of 50 MW which is connected to the PES transmission network via a 2km long transmission line. Oversizing of transmission lines and transformer are considered due to the possibility of additional installations in the specified space whit an amount of 20MW.

Fig. 8. Display of all positions of the plant, 10x3MW

When the PV plant has significant production due to the required balance in terms of planned production, the same amount is reduced by the production of hydrogen generators. This directly leads to energy accumulation in the hydro potential. Given the good weather forecasts available today, this production can easily be planned too. If we assume that the longest sunny day is 10 hours (smaller) and that the production is maximum then the whole day PV production can be placed in 120000 m^3 of water corresponding to a 9.2cm lake level increase.

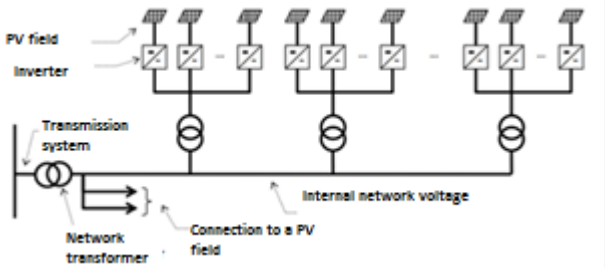

Fig. 9. Single-pole connection scheme to the PES

D. Economic analysis

The rate of utilization of photovoltaic systems is defined as the amount of energy delivered to the PES and the energy at the output from solar panels.

$$PR = \frac{E_{es}}{E_{pv}} \tag{6}$$

If we cover all losses on DC lines, AC lines, inverters, transformers, and connection to the PES we can estimate them to 15%.

The energy obtained from the photovoltaic module is calculated as:

$$E_{pv} = E_{zs} \cdot \eta \cdot A \tag{7}$$

Where E_{SZ} is the invasive solar radiation energy, η coefficient of solar panel efficiency, and A is the total surface area of the solar module. If we add specific values we get:

$$E_{pv} = 3{,}92 \frac{kWh}{m^2} \cdot \frac{16.9}{100} \cdot 10 \cdot 14312 \cdot 0{,}8m \cdot 1.55m \cdot 365 =$$
$$= 42912878\ kWh \approx 43GWh$$

With a 85% utilization rate, this amounts to 36.55GWh of electricity per year, that is, in average 4.7% of the existing production of HPP Jablanica. The average cost of construction of such facilities is EUR 2 million for 1 MW, giving a total investment of EUR 60 million.

Given that it is a power plant that would be part of EPB&H and which, because of the installed power of EPB&H it would not get any incentives, an important parameter is the production cost of electricity from this plant. For the proposed solar panels the manufacturer gives a guarantee of 97% of the declared power at the beginning of the exploitation period, with 90% at the end of the 10-year period and 60% at the end of the 20-year exploitation period. Now the total 10-year production can be estimated at 341.74GWh. If there exists a request for the 10-year repayment term, then the minimum price for 1kWh is 17.5 cents. If we assume a repayment period of 20 years with 10% maintenance costs, the total production would be 597.59GWh, and the price would be 11 cents per 1 kWh. This price is better than the price of electricity from thermal power plants.

The above mentioned analysis, the price of the electricity grid, which is part of the investments of EPB&H, was not included.

V. Conclusion

The possibility of building floating solar plants on the accumulation of Jablanica Lake was analyzed. It was shown that on a surface of 380250 m^2, there could be installed a solar plant with a nominal power of 30MW with an annual production of 36.55GWh. This area amounts to less than 3% of the surface of the lake. Despite the high price of this technology, such a plant would have reached a production cost of 11 cents per 1kWh for a period of 20 years.

A modular installation with a 3MW basic module was proposed, which would allow the construction phase. Because of the high power it was considered to have an adapter to the transmission network via the 20kV/220kV transformer. A special advantage of such systems should be the emphasis on increasing the efficiency of HPP Jablanica. All PV production would normally be easily taken from the transmission system. If the planned production or the currently required HPP production requires less energy, then the required number of hydro generators will be excluded, which will result in an increase in accumulation or a rise in the level of the lake.

It was shown that the maximum daily PV production of the plant would lead to an increase of the lake level of 9.2 cm and that the quarterly production could be placed in less than 10m of lake level changes.

All considered sites are chosen so as not to disturb the existing function of the lake, to keep the lake buoyant and usable for the needs of tourism, fishing or sport.

References

[1] James Watson, Micheal Schmela, 'Global market outlook for Solar Power 2017-2021'. Solar Power Europe 2017.

[2] REGULATORNA KOMISIJA ZA ENERGIJU U FEDERACIJI BOSNE I HERCEGOVINE - F E R K, Odluka o garantovanoj otkupnoj cijeni iz obnovljivih izvora energije, Mostar, 2014.

[3] Damon Turney, Vasilis Fthenakis, 'Environmental impacts from the installation and operation of large-scale solar power plants', Renewable and Sustainable Energy Reviews 15 (2011) 3261–3270.

[4] Denholm P, Margolis RM., 'Impacts of array configuration on land-use requirements for large-scale photovoltaic deployment in the United States', San Diego, CA: American Solar Energy Society; 2008, 2008 at SOLAR 2008.

[5] Ranko Goić, Jakov Krstulović Opara, Damir Jakus, Ivo Zlatunić, Ivan Penović, 'Priključak velikih fotonaponskih elektrana na distribucijsku mrežu', DRUGO SAVJETOVANJE HRVATSKOG OGRANKA MEĐUNARODNE ELEKTRODISTRIBUCIJSKE KONFERENCIJE, Umag, 16. – 19. svibnja 2010.

[6] Andrew Follett, 'Top 11 Problems Plaguing Solar And Wind Power', The Daily Calle, 2015.

[7] Trapani, K., Santafe, M. R., ‘A review of floating photovoltaic installations: 2007 – 2013’, Progress in Photovoltaics Research and Applicatins, Januar 2014.

[8] Ciel&Terre, ‘Our-floating-solar-power-plants-references’, 2017.

[9] Steve Hanley, 'China Activates World’s Largest Floating Solar Power Plant', May 26th, 2017.

[10] Emiliano Bellini, ‘Ciel&Terre starts construction on the world's largest floating PV plant’, Juni 2017.

[11] N. Krishnaveni, P. A., Vigneshkumar, D., ‘A survey on floating solar power system’, International Journal of Current Research and Modern Education (IJCRME), 2016.

[12] Ciel&Terre, ‘Hydrelio technology, components’ 2017.

[13] Subhash Chander, A. Purohit, Anshu Sharma, Arvind, S.P. Nehra, M.S. Dhaka, 'A study on photovoltaic parameters of mono-crystalline silicon solar cell with cell temperature', Elsevier, Energy Reports 2015.

[14] EPBiH, ‘Hidroelektrane na Neretvi’, 2017.

[15] NASA, ‘Surface meteorology and Solar Energy database’

[16] Sunpowercorp, ’Document #001-42023 Rev **’

[17] Song, J., Choi, Y., ‘Analysis of the potential for use of floating photovoltaic systems on mine pit lakes: Case study at the ssangyong open-pit limestone mine in korea’, Energies 2016, Vol. 9, No. 102, Februar 2016.

View publication stats